COMPONENT SPECIFICATION	USE OR REPRODUCTION OF THIS DRAWING FOR THE PURPOSE OF MANUFACTURING THIS ARTICLE OR ANY ARTICLES SHOWN FOR ANY PURPOSE IS STRICTLY PROHIBITED WITHOUT WRITTEN PERMISSION FROM SENIOR INDUSTRIES, INC.

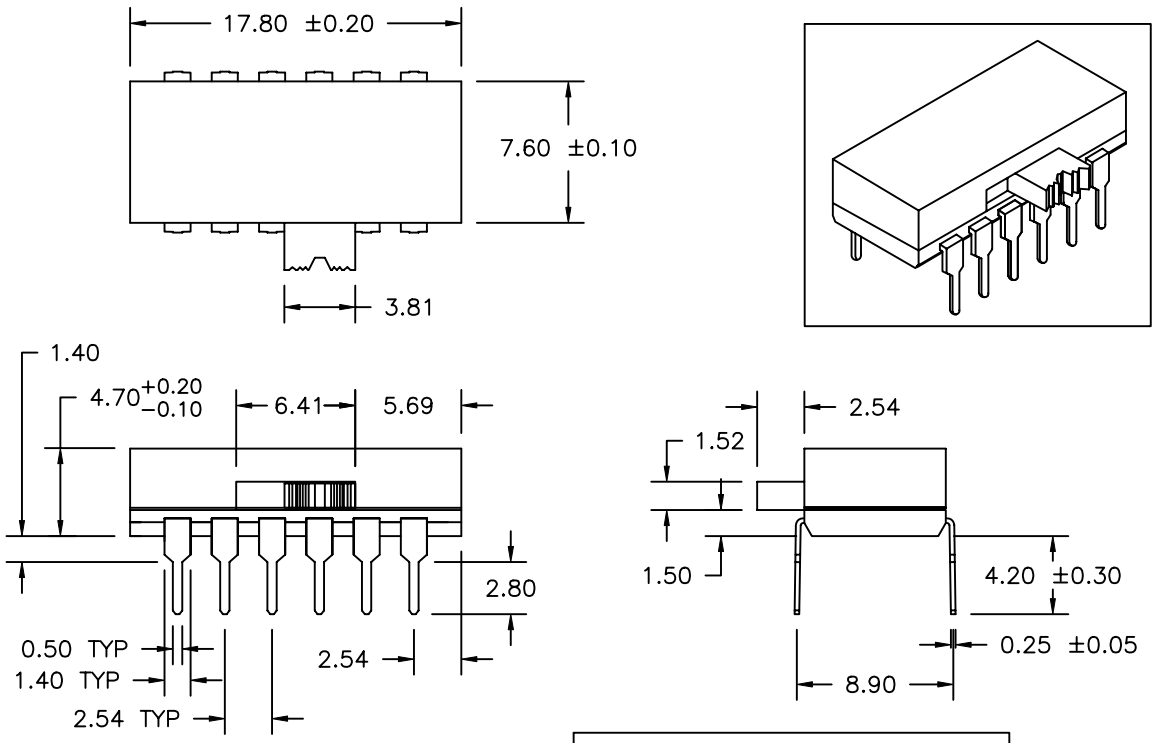

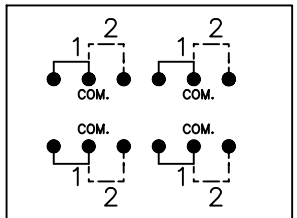

SCHEMATIC
(SHORTING TYPE)

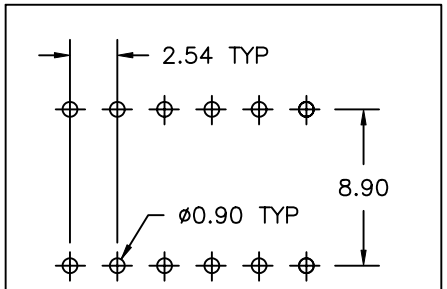

P.C.B. LAYOUT
COMPONENT SIDE

SPECIFICATIONS

ELECTRICAL:

CONTACT RATING:	SILVER – 300 mA @ 125 VAC GOLD – 0.4VA @ 20 VDC
CONTACT RESISTANCE:	20 MILLIOHMS MAX.
INSULATION RESISTANCE:	100 MEGOHMS MIN. @ 500 VDC
DIELECTRIC STRENGTH:	500 V RMS FOR 1 MINUTE

MECHANICAL:

LIFE:	15,000 CYCLES
ACTUATION FORCE:	400 ±150 GRAMS

MATERIAL:

HOUSING:	PBT G30, UL94V–0
ACTUATOR:	VALOX 357, UL94V–0
MOVING CONTACT:	PHOSPHOR BRONZE
FIXED CONTACT/TERMINAL:	COPPER ALLOY
PLATING: CONTACTS	30µIN GOLD OVER 50µIN NICKEL OR 50µIN SILVER OVER NICKEL PLATE
TERMINATION AREA	200µIN TIN OVER NICKEL.

ENVIRONMENTAL:

OPERATING TEMPERATURE: −40°C TO +85°C

NOTES:

1. SWITCH SHALL BE AUTO INSERTABLE
2. 'X' IN PART NUMBER DENOTES PLATING:
   - 1 – SILVER PLATING
   - 3 – GOLD PLATING

TELECOM GRADE

SENIOR INDUSTRIES, INC.

			SYM.	DATE:	DESCRIPTION OF REVISIONS:	DRAWN:	APPD:
DESIGNED:			B	06.13.97	Tranferred dwg to CAD format	TF	JF
DRAWN:	HV	04/06/97	A	08.11.98	Note Added	JF	JF
CHECKED:	GAT	11/06/06	D	12.31.01	Added Note 2. removed 'Sealed' from the Title	RB	JF
APPROVED:	JF	11/06/06	E	11.28.05	New index, spec added, Notes corrected	GAT	JF
			F	11.06.06	Corrected Housing & Actuator material	GAT	JF

3RD ANGLE		UNIT:	mm	SCALE:	3:1	REV.	F

TOLERANCE:
TO 1 DECIMAL PLACE: ±
TO 2 DECIMAL PLACES: ±.13
AS ANGLES: ±1/2°

PART NO:	42SAS3RX
TITLE:	SLIDE SWITCH
SCALE	1 OF 1